ASSEMBLY INSTRUCTIONS

Oscar Learning Tower SKU Code: 663701077407

HARDWARE LIST

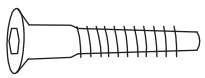		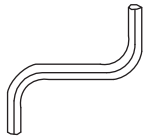
S1 x 30	S2 x 11	K1 x 1

SAFETY WARNINGS:

The Learning Tower must only be used under adult supervision.
Your child must always remain within arms reach.
Prior to use, ensure all dangerous and poisonous items are out of reach.
Also ensure the tower is not placed near any hot surfaces or items.

COMPONENT LIST

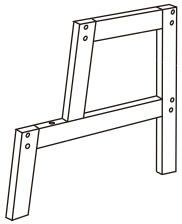	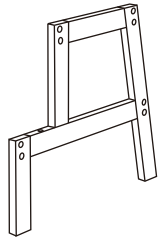	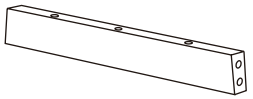	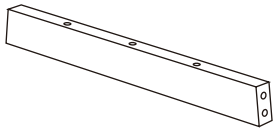	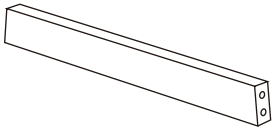	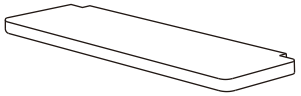
A1 X 1	A2 X 1	B X 2	C X 1	D X 1	E X 1
		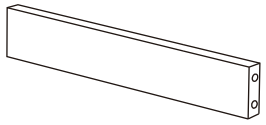	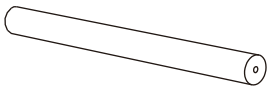	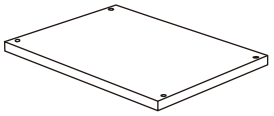	
F1 X 1	F2 X 1	G X 2	H X 1	I X 1	

ASSEMBLY INSTRUCTIONS

STEP 1

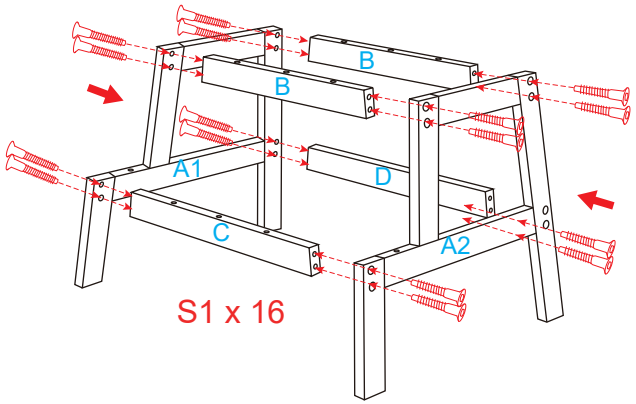

STEP 2

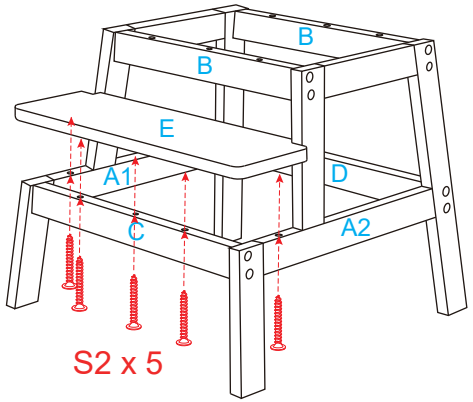

STEP 3

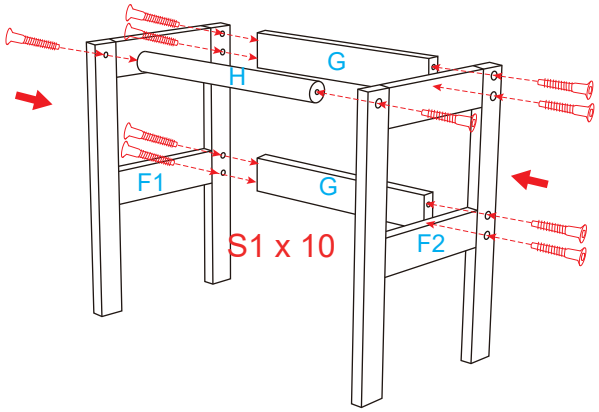

STEP 4

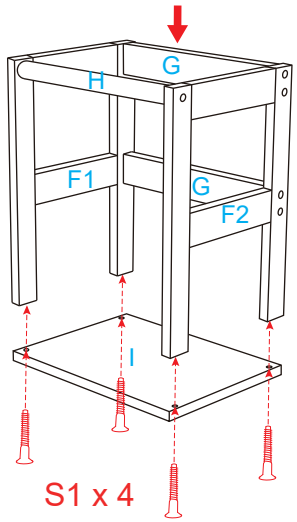

STEP 5

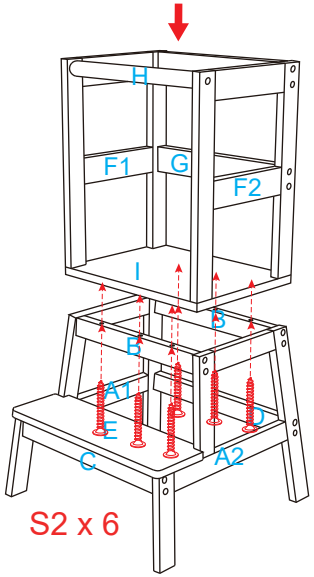

STEP 6

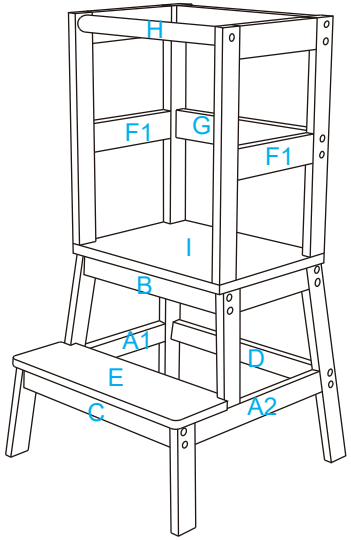

Ensure all screws and hardware are tightened and locked into place before use.
Use only on a firm ground which is horizontal, level and dry.